Project _____

Item # _____

Quantity _____

Toast-Qwik® Electric Conveyor Toasters

Models: TQ3-400,
TQ3-500, -500H,
TQ3-900, -900H,
TQ3-2000, -2000H

Hatco's industry-leading Toast-Qwik® Conveyor Toasters have been completely redesigned to provide a great new look, easy to use touchscreen controller and increased production capabilities. They continue to provide the best reliability, flexibility and value of any conveyor toaster available!

TQ3-500 in optional Designer Warm Red

TQ3-2000 in standard Designer Black

Standard features

- Model number indicates approximate hourly slice capacity
- Dynamic new touchscreen controller that is easy to see and easier to use
- Up to twelve programmable settings for precise and instant product changes
- USB port for software updates
- Patented ColorGuard Sensing System which monitors chamber temperature and adjusts conveyor speed to ensure consistent toast results - even in your busiest periods
- Programmable Power Save mode activates manually or automatically
- Crumb tray is removable for easy cleaning
- Unique new toast delivery rack moves your product to the storage tray each and every time (TQ3-400 comes with a loose aluminum toast storage tray)
- 2" high opening is standard - 3" high opening available on the TQ3-500H, -900H and -2000H models for thicker bread products

Options (available at time of purchase only)

Designer Colors ▪
Non-standard colors are non-returnable – *Designer* Black standard
☐ Warm Red ☐ Stainless Steel

☐ NEMA 6-30P cord in lieu of standard cord (TQ3-500 and -900 series only)

☐ Stainless Steel toast tray insert (TQ3-500 and -900 series only)

☐ Extended feed ramp in lieu of existing ramp - adds 3" (76 mm) (excludes TQ3-400 models)

☐ XL extended feed ramp in lieu of existing ramp - adds 9" (229 mm) (on TQ3-500 and -900 models only)

▪ IFS anti-microbial coatings use naturally-occurring, environmentally sustainable, silver ions to help inhibit the growth of microbes on the powder coated surface. See www.hatcocorp.com/antimicrobial-paint for more information.

For operation, location and safety information, please refer to the Installation and Operating Manual.

ANSI/NSF 4

MADE IN THE USA

HATCO CORPORATION | P.O. Box 340500 Milwaukee, WI 53234-0500 U.S.A. | (414) 671-6350

www.hatcocorp.com | support@hatcocorp.com | Find a Hatco Rep | Image Library | Document Library | Patents | Chat

Toast-Qwik® Electric Conveyor Toasters

Models: TQ3-400, -500, -500H, -900, -900H, -2000, -2000H

TQ3-400, -500, -900

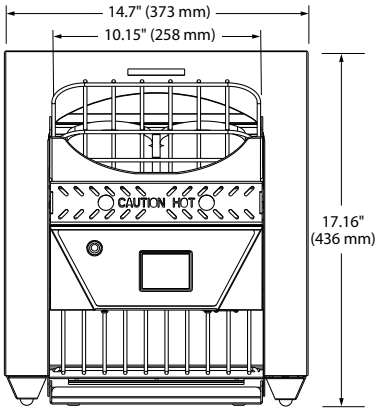

FRONT VIEW

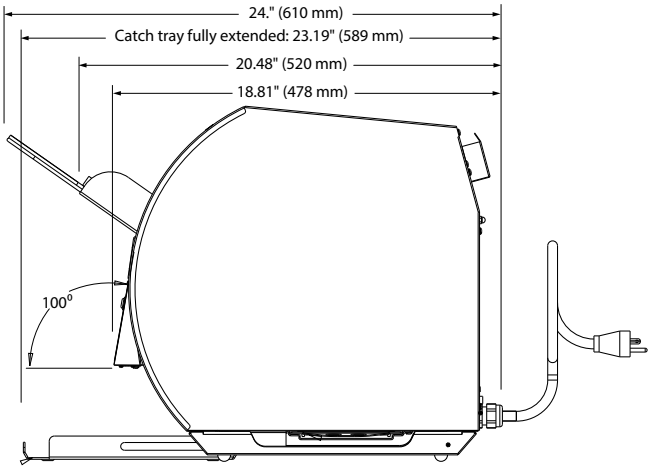

SIDE VIEW

SPECIFICATIONS
Toast-Qwik® Conveyor Toasters

The shaded areas contain electrical information for International models

Model	Opening Dimensions (W x H)	Dimensions (W x D▱ x H)	Volts Single Phase	Hertz	Watts	Amps	Plug	Approx. Ship Weight
TQ3-400	10.15" x 2" (258 x 51 mm)	14.7" x 20.48" x 17.16" (373 x 520 x 436 mm)	120	50/60	1780	14.8	NEMA 5-15P♣	54 lbs. (25 kg)
TQ3-500	10.15" x 2" (258 x 51 mm)	14.7" x 20.48" x 17.16" (373 x 520 x 436 mm)	200	50/60	2053	10.3	PSE	54 lbs. (25 kg)
			208	50-60	2220	10.7	NEMA 6-15P, NEMA 6-30P	
			220	60	2031	9.2	BS-1363	
			220-230	50/60	2031-2220	9.2-9.7	Schuko 7/7, BS-1363, CCC	
			230-240	50/60	2039-2220	8.9-9.3	BS-1363, AS-3112 or No Plug	
			240	50-60	2220	9.3	NEMA 6-15P, NEMA 6-30P	
TQ3-500H	10.15" x 3" (258 x 76 mm)	14.7" x 20.48" x 17.16" (373 x 520 x 436 mm)	200	50/60	2053	10.3	PSE	54 lbs. (25 kg)
			208	50-60	2220	10.7	NEMA 6-15P, NEMA 6-30P	
			220	60	2031	9.2	BS-1363	
			220-230	50/60	2031-2220	9.2-9.7	Schuko 7/7, BS-1363, CCC	
			230-240	50/60	2039-2220	8.9-9.3	BS-1363, AS-3112 or No Plug	
			240	50-60	2220	9.2	NEMA 6-15P, NEMA 6-30P	
TQ3-900	10.15" x 2" (258 x 51 mm)	14.7" x 20.48" x 17.16" (373 x 520 x 436 mm)	200	50/60	2792	14.0	No Plug	54 lbs. (25 kg)
			208	50-60	3020	14.5	NEMA 6-20P, NEMA 6-30P	
			220	60	2763	12.6	BS-1363	
			220-230	50/60	2763-3020	12.6-13.1	No Plug, Schuko 7/7, CCC	
			230-240	50/60	2774-3020	12.1-12.6	BS-1363, AS-3112 or No Plug	
			240	50-60	3020	12.6	NEMA 6-20P, NEMA 6-30P	
TQ3-900H	10.15" x 3" (258 x 76 mm)	14.7" x 20.48" x 17.16" (373 x 520 x 436 mm)	200	50/60	2792	14.0	No Plug	54 lbs. (25 kg)
			208	50-60	3020	14.5	NEMA 6-20P, NEMA 6-30P	
			220	60	2763	12.6	BS-1363	
			220-230	50/60	2763-3020	12.6-13.1	No Plug, Schuko 7/7, CCC	
			230-240	50/60	2774-3020	12.1-12.6	BS-1363, AS-3112 or No Plug	
			240	50-60	3020	12.6	NEMA 6-20P, NEMA 6-30P	

▱ Tray extends to 23.19" (589 mm).
♣ Canadian models use NEMA 5-20P.

Toast-Qwik® Electric Conveyor Toasters

Models: TQ3-400, -500, -500H, -900, -900H, -2000, -2000H

TQ3-2000

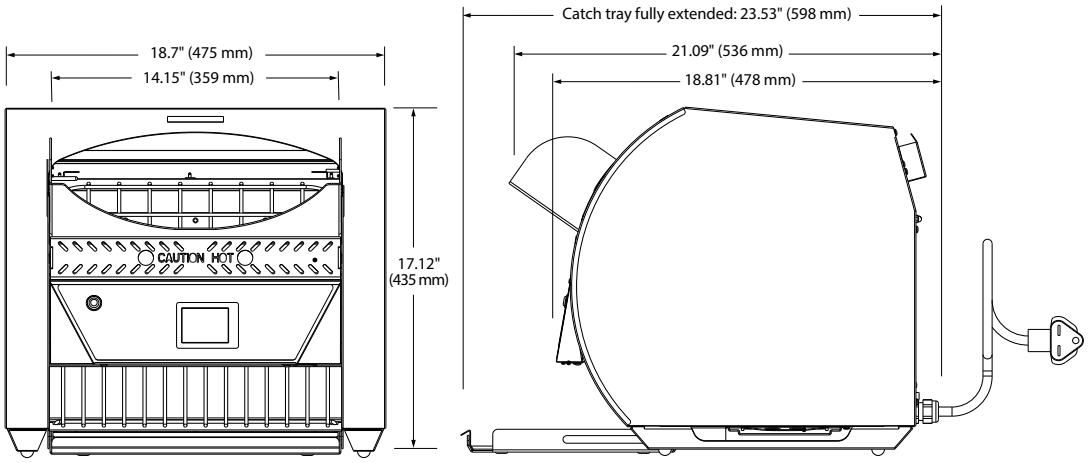

FRONT VIEW SIDE VIEW

SPECIFICATIONS
Toast-Qwik® Conveyor Toasters

The shaded areas contain electrical information for International models

Model	Opening Dimensions (W x H)	Dimensions (W x D▱ x H)	Volts Single Phase	Hertz	Watts	Amps	Plug	Approx. Ship Weight
TQ3-2000	14.15" x 2" (359 x 51 mm)	18.70" x 21.09" x 17.12" (475 x 536 x 435 mm)	200	50/60	3717	18.6	PSE or No Plug	67 lbs. (30 kg)
			208	50-60	4020	19.3	NEMA 6-30P	
			220	60	3678	16.7	No Plug	
			220-230	50/60	3678-4020	16.7-17.5	No Plug	
			230-240	50/60	3692-4020	16.1/16.8	No Plug	
			240	50-60	4020	16.8	NEMA 6-30P	
TQ3-2000H	14.15" x 3" (359 x 76 mm)	18.70" x 21.09" x 17.12" (475 x 536 x 435 mm)	200	50/60	3717	18.6	PSE or No Plug	67 lbs. (30 kg)
			208	50-60	4020	19.3	NEMA 6-30P	
			220	60	3678	16.7	No Plug	
			220-230	50/60	3678-4020	16.7-17.5	No Plug	
			230-240	50/60	3692-4020	16.1/16.8	No Plug	
			240	50-60	4020	16.8	NEMA 6-30P	

▱ Tray extends to 23.27" (591 mm).

CORD LOCATION

Lower right corner on back of unit.

PLUG CONFIGURATIONS

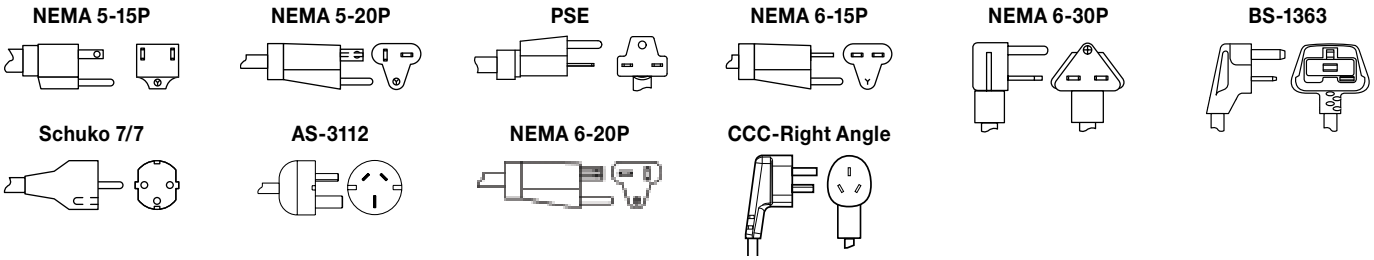

PRODUCT SPECS
Conveyor Toasters

The electric Toast-Qwik® Conveyor Toaster with ColorGuard sensing system shall be a Hatco model ... as manufactured by the Hatco Corporation, Milwaukee, WI 53234 U.S.A.

The Toaster shall have the capacity to toast up to ... pieces per hour and it shall be rated at ... kW, ... volts, single phase. The toaster shall be of Powdercoated or stainless steel design and shall include a front mounted control panel with a touch screen controller, USB port, a removable/cleanable cooling fan filter, variable speed control and programmable power save mode. The toaster will have metal sheathed heating elements and factory attached UL listed cord and plug.

Warranty consists of 24/7 parts and service assistance (US and Canada only).

HATCO CORPORATION | P.O. Box 340500 Milwaukee, WI 53234-0500 U.S.A. | (414) 671-6350

www.hatcocorp.com | support@hatcocorp.com | Find a Hatco Rep | Image Library | Document Library | Patents | Chat